FLORIDA-P VISIÓN

SDC SCL SSV SBE

kW 14

%		m³			kg	∅				
80,54	4,2	350			92	200	2x120	2x160	725x282x320	79

Features

- Double Combustion System
- Clean Glass System
- Security System in Fans
- Low Emissions System
- Heating power: 14kw
- Efficiency (%): 80,54%
- Consumption (kg/h): 4,2kg/h
- Heating capacity (m3): 350m3
- Vermiculite inside
- Manufactured in cast-iron and steel
- Weight (kg): 92kg
- Smoke exit tube diameter (mm): 200mm
- Air channel (diameter and exit tube number): 2x120
- Forced ventilation: 2x160
- Useful chamber measures: 725x282x320mm
- Maximum logs size (cm): 79cm

5 years guarantee

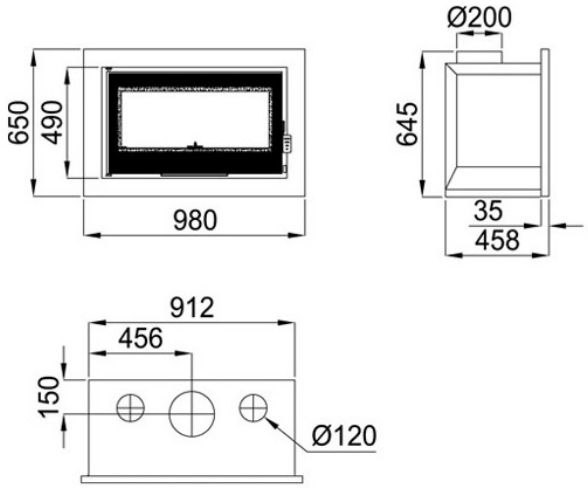

Given the continued improvement of our products and improving our manufacturing process, size, aesthetics and product specifications are subject to change without prior notice from our company.

www.bronpi.com

BRONPI
la excelencia en el fuego

©Bronpi Calefacción, S.L. reserves all rights to the images that appear in this document. You may not reproduce or distribute part or all of the photographs and as the text. Both the brand as distinctive symbols are the exclusive property of the company. Violators will be prosecuted according to law.